20KA 3-Electrode Gas Arrester

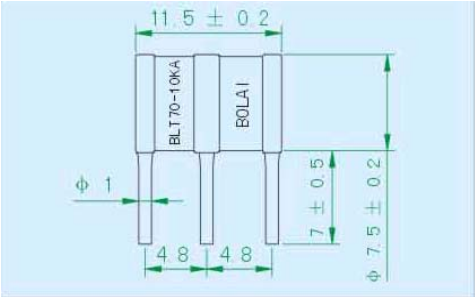

L1-E=20KA
L2-E=20KA
(L1+L2) - E = 40KA

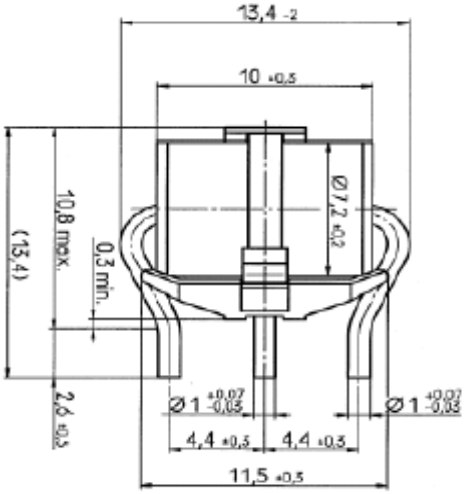

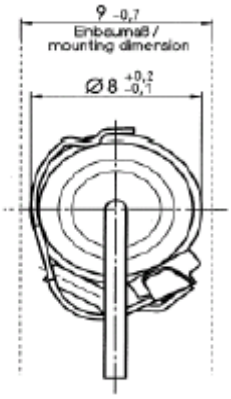

w / Fail safe device

Item#	Part Number										
	BLT070-2	BLT090-2	BLT150-2	BLT230-2	BLT350-2	BLT500-2	BLT600-2	BLT800-2	BLT1000-2	BLT1200-2	BLT1500-2
DC spark-over voltage (V)	70±20%	90±20%	150±20%	230±20%	350±20%	500±20%	600±20%	800±20%	1000±20%	1200±20%	1500±20%
Impulse spark-over voltage at 1KV/μS (V)	＜600	＜700	＜700	＜800	＜800	＜1100	＜1200	＜1400	＜1800	＜2000	＜2500
Nominal impulse discharge current 8/20μS (KA)	20	20	20	20	20	20	20	20	20	20	20
Single impulse discharge current 8/20μS	25	25	25	25	25	25	25	25	25	25	25
Nominal alternating discharge current (A)	10	10	10	10	10	10	10	10	10	10	10
Alternating discharge current (50Hz 9cycles) (A)	20	20	20	20	20	20	20	20	20	20	20
Insulation resistance at 250Vdc (MΩ)	＞10000	＞10000	＞10000	＞10000	＞10000	＞10000	＞10000	＞10000	＞10000	＞10000	＞10000
Capacitance at 1MHz (Pf)	＜20	＜20	＜20	＜20	＜20	＜20	＜20	＜20	＜20	＜20	＜20
Arc voltage at 1A (V)	~25	~25	~25	~25	~25	~25	~25	~25	~25	~25	~25
Operation and storage temperature (℃)	-40～+90	-40～+90	-40～+90	-40～+90	-40～+90	-40～+90	-40～+90	-40～+90	-40～+90	-40～+90	-40～+90